Bi-directional AES/EBU Digital Audio and Remote Power over a single Cable

Adrian Freed
CNMAT, UC Berkeley
1750 Arch Street
Berkeley, CA 947709
510 643 9990
adrian@cnmat.berkeley.edu

Introduction

Although the AES/EBU digital audio standard has already been adapted to optical, twisted pair [1] and coaxial cables [2]. This paper explores cabling options for new and emerging applications of digital audio communications. Enabling features include remotely powering devices over the audio cable and bi-directional communications. Remote power benefits both ends of the audio reproduction chain: microphones and instrument pickups on the input end and loudspeakers and headphones on the output end. Bi-directionality is an important feature because so many audio applications have inputs and outputs that are physically proximate, e.g., headset microphones with monitoring, stage boxes, and signal processing effects.

In contrast to studio situations, the aforementioned "live" audio applications require processing elements to be physically dispersed in locations where it may be expensive or inconvenient to provide electrical power. Note that although a guitar, for example, is primarily a source of audio, the guitarist can certainly take advantage of audio sent down a single cable to provide a monitor audio feed, or a tuning reference. Providing headset monitoring is now widely accepted practice for singers in live performance application, favoring a bi-directional audio link.

There are also opportunities in digital audio applications to exploit bi-directional communication of gestures and indicator values [3].

The remote power requirement precludes optical and wireless approaches, leaving twisted pair and coaxial as the main alternatives. The computer industry has recently focussed on twisted pair solutions with USB [4] and Firewire [5]. GMICS [6], an interesting new proposal from Gibson Guitar, adopts 100BaseT Catagory 5 cable as one possible physical layer implementation for a multi-channel protocol supporting powered, bi-directional communication. This paper communicates results of exploratory experiments with other physical layer options: coaxial and tri-axial cable.

Powered AES-3 over coaxial cable

One straightforward way of providing power over AES/EBU twisted pair cabling is illustrated below:

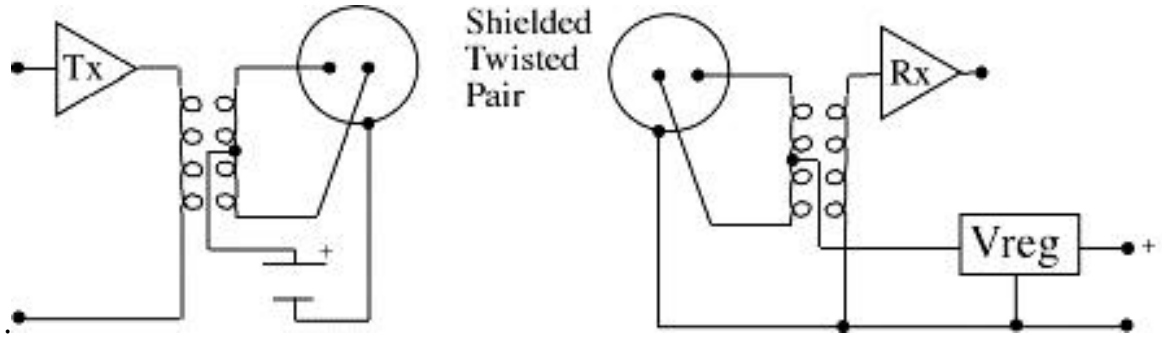

The method is an adaptation of the phantom power standard used in analog microphones. The alternative illustrated below uses standard 75 Ohm coaxial cables and uses a single, easier to build transformer.

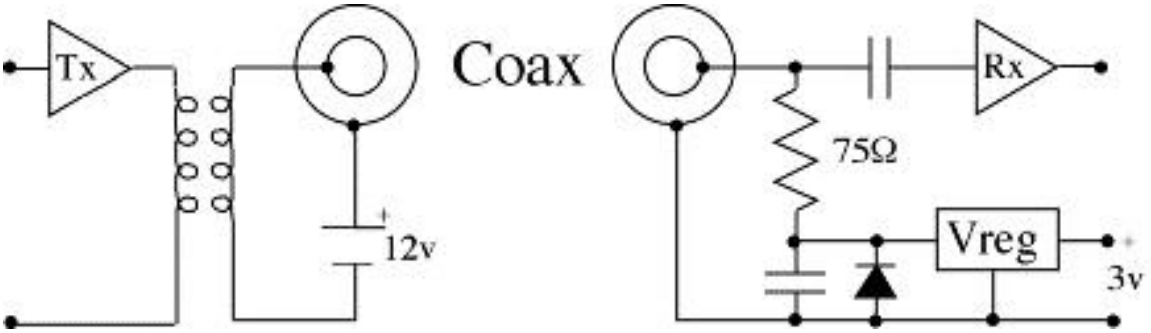

This scheme uses AC termination at the receiver allowing use of a straightforward network to separate the DC power from the AES/EBU information. Note that this method works because AES/EBU coding communicates no information at DC. A prototype of this scheme operated continuously for days at a time over 20 feet of cable with no detected data errors. The powered devices contained a Crystal AES/EBU receiver and a D/A converter. No extra jitter was observed at the D/A converter clock when the device was remotely powered.

Neither of the aforementioned schemes can provide large currents to the receiving device. For the phantom power scheme, this is due to the internal resistance of the transformer windings and constraints on their size to meet high frequency specifications. For the AC termination method, the termination resistor creates a current-dependent voltage differential between the power source and sink. Even at moderate currents, e.g. 100mA, this differential is high, 7.5V. This results in unnecessary power dissipation in the termination resistor which has to be appropriately chosen (metal, not wire-wound) and cooled. These issues relegate these schemes to specialized applications with low power requirements such as class-D headphones [7] and digital microphones [8].

Bi-directional AES-3 over coaxial cable

Simultaneous bi-directional communication over a single pair of conductors is at least as old as the telegraph. The following scheme was adopted to explore bi-directional AES/EBU applications over standard 75Ohm coaxial cable:

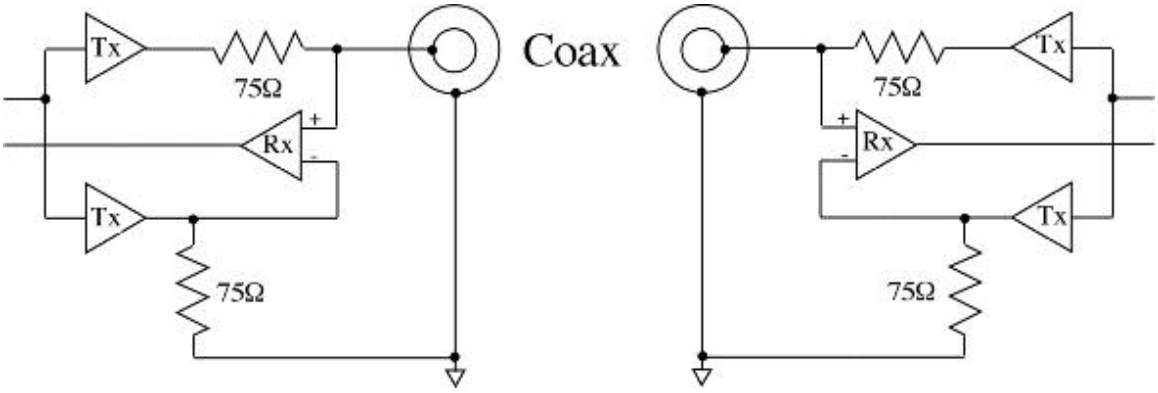

Each end of the cable driven is driven simultaneously. Series termination creates a node at each end to sense received data. The receiver nulls out the superimposed local transmission by subtracting a separate, conventionally terminated copy. This method is particularly economical since no transformers are used and it can be entirely integrated [9, 10] into a chip that may also integrate the AES-3 transcoding [11]. A further advantage of this integrated approach is that dynamic impedance matching [12] and line equalization [13] can be easily incorporated. Line equalization may be an important requirement if a soft dielectric material, such as cellular polyethylene, is selected in the construction of the cable in the interests of mechanical flexibility.

A discrete component prototype of the bi-directional approach was built using CD player sources at each end and Crystal AES/EBU receiver and D/A converter evaluation boards. When the transmitted signal was nulled by correctly matching the components, no communications errors were detected during several days of operation. Furthermore, no additional jitter was observed at the converter clock when the local end started transmitting. This surprising result demanded further investigation. Since the clocks for each transmitter were asynchronous, opportunities for jitter are created whenever bit transitions coincided. The jitter measurement software of a Tektronix digital oscilloscope was then configured to measure jitter between the edges of the remote clock source and those recovered in the discrete receiving circuitry. Additional jitter was indeed detectable and increased as the nulling signal was deliberately mismatched in amplitude. Although comforting, this measurement in itself is not very useful as the high frequency sampling method of a digital oscilloscope is entirely different from an AES/EBU receiver's dual-PLL clock recovery [2].

The important result of these measurements is that a standard AES/EBU receiver chip has no difficulty attenuating the jitter from the bi-directional communication. This is because these receivers operate on edges and the frequency of occurrence of coincident edges is low and crosstalk is smaller in amplitude than the hysteresis window used by the receiver's edge detector. It is interesting that the

aforementioned measurements were made in the pleisochronous case [14] when coincident edges occur at a low beat frequency from the two clocks. This represents a worse case scenario, since synchronous clocks can be phase aligned to eliminate coincident transitions and widely different sample rate clocks result in low coincidence rates.

Powered AES-3 over tri-axial cable

The advantages of a single cable for sound and power became obvious during the installation of a large array of speakers in CNMAT's sound spatialization theatre [15]. We selected Meyer HM–1's for this application because their compact size and radial symmetry simplified rigging, and computer modeling. They also offer good localization performance at a wide range of frequencies. We use 48V DC power for these speakers, which allows thm to be safely placed anywhere in the room without requiring large numbers of AC power outlets. We are motivated to combine the power delivery and sound delivery wiring into a single cable, because threading cables turns out to be one of the most time consuming parts of changing the speaker configuration in the spatial sound theater.

To this end, we have been experimenting with tri-axial cable configured with outer conductor as ground, inner concentric conductor as power and the innermost wire for bi-directional digital data. Tri-axial cable has been used to deliver power and data for many years in underwater cables [16], submarines [17] and outside broadcast video cameras [18]. The following arrangement was used to evaluate tri-axial cable in a digital speaker application:

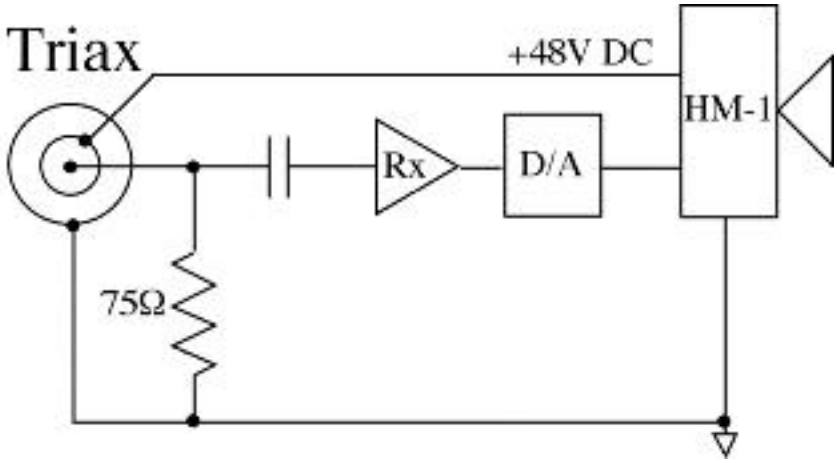

Most standard tri-axial cables can easily meet the power requirements of this application and no communication errors or increased jitter was observed in the prototype. A 200 foot long cable and a loud, percussive test sound was used in an attempt to induce sound dependent jitter. The concern is that modulating current to the speaker drivers interacts with the finite resistance of the tri-axial cable ground conductor inducing a modulation seen by the AES receiver front end. No increased jitter was observed at the D/A clock, no doubt because of the low-pass filtering action of an enormous power supply decoupling capacitor in the HM-1 and the high-pass filtering inherent the AES-3 clock recovery.

Conclusion

Powered, bi-directional communication is hardly a new idea and in fact historically has been the rule rather than the exception. Speaker tubes between ship's bridges and boiler rooms, the telegraph, and the telephone all have both features. The crystal set radio is one directional, but entirely powered by the RF signal itself. Most computer and data bus signaling is bi-directional.

Device manufacturing costs continue to plummet in the digital audio area. The cost of buying, rigging and repairing cables steadily climbs. It is therefor inevitable that solutions that achieve systems goals with the least number of cables will be the most commercially successful. The techniques introduced in this paper have been used commercially for many years at 900MHz rates and no particularly difficult engineering challenges were encountered in the experiments described herein. The combination of tri-axial cable and a single-chip integrating transceiver, clock recovery, data encoding and decoding would be inexpensive in many digital audio applications.

Acknowledgements

AKM
Crystal Semiconductors
Gibson Guitar
Tektronix
Roger Godin
John Lazzaro
Meyer Sound
Scientific Conversion

References

[1] D. G. Kirby, “Twisted-pair cables for AES/EBU digital audio signals,” *Journal of the Audio Engineering Society*, vol. 43, pp. 137-46, 1995.

[2] AES, “AES recommended practice for digital audio engineering-serial transmission format for linearly represented digital audio data,” *Journal of the Audio Engineering Society*, vol. 33, pp. 975-84, 1985.

[3] A. Freed and D. Wessel, “Communication of Musical Gesture using the AES/EBU Digital Audio Standard,” presented at International Computer Music Conference, Ann Arbor, Michigan, 1998.

[4] M. Zerkus, J. Lusher, and J. Ward, “USB primer. Practical design guide,” *Circuit Cellar Ink*, pp. 58-60, 62, 65, 67-9, 1999.

[5] J. Canosa, “Fundamentals of Firewire,” *Embedded Systems Programming*, vol. 12, pp. 52-3, 55-6, 58, 60, 62, 64, 66-8, 70, 72, 1999.

[6] Gibson, “GMICS Specification 1.0,” 1999.

[7] J. Melanson, “Class D PCM, US Patent #5,815,102,” : AudioLogic, 1999.

[8] A. SC-04-04D, “Standards Committee Working Group on Microphone Characterization,” : AES, 1999.

[9] K. Lam, L. R. Dennison, and W. J. Dally, “Simultaneous bidirectional signalling for IC systems,” presented at Proceedings. 1990 IEEE International Conference on Computer Design: VLSI in Computers and Processors, Cambridge, MA, USA, 1990.

[10] R. Mooney, C. Dike, and S. Borkar, “A 900 Mb/s bidirectional signaling scheme,” presented at Digest of Technical Papers. ISSCC (Cat. No.95CH35753) Proceedings ISSCC '95 - International Solid-State Circuits Conference, San Francisco, CA, USA, 1995.

[11] L. Kyeongho, K. Sungjoon, A. Gijung, and J. Deog-Kyoon, “A CMOS serial link for fully duplexed data communication,” *IEEE Journal of Solid-State Circuits*, vol. 30, pp. 353-64, 1995.

[12] T. Takahashi, M. Uchida, R. Yoshino, M. Yamamoto, and N. Kitamura, “A CMOS gate array with 600 Mb/s simultaneous bidirectional I/O circuits,” *IEEE Journal of Solid-State Circuits*, vol. 30, pp. 1544-6, 1995.

[13] A. J. Baker, “An adaptive cable equalizer for serial digital video rates to 400 Mb/s,” presented at IEEE International Solid-State Circuits Conference, San Francisco, CA, 1996.

[14] D. G. Messerschmitt, “Synchronization in digital system design,” *IEEE Journal on Selected Areas in Communications*, vol. 8, pp. 1404-19, 1990.

[15] S. Khoury, A. Freed, and D. Wessel, “Volumetric Modeling of Acoustic Fields in CNMAT's Sound Spatialization Theatre,” presented at AES 104th Convention, San Francisco, CA, 1998.

[16] T. McGinnis, “Design and applications of a versatile multiplexed telemetry and power system for coax cables,” presented at Proceedings of OCEANS '93, Victoria, BC, Canada, 1993.

[17] R. O. Starkson, “A triaxial bus transmission system,” presented at Proceedings of the 4th Conference on Local Computer Networks, Minneapolis, MN, USA, 1979.

[18] B. N. Murata, F. Ukigaya, Y. Eto, N. Sakuraba, and T. Delp, “A totally digital camera system using digital triaxial transmission,” *SMPTE Journal*, vol. 105, pp. 647-52, 1996.